THIS DRAWING IS FOR PLANNING PURPOSES ONLY DO NOT USE FOR CONSTRUCTION

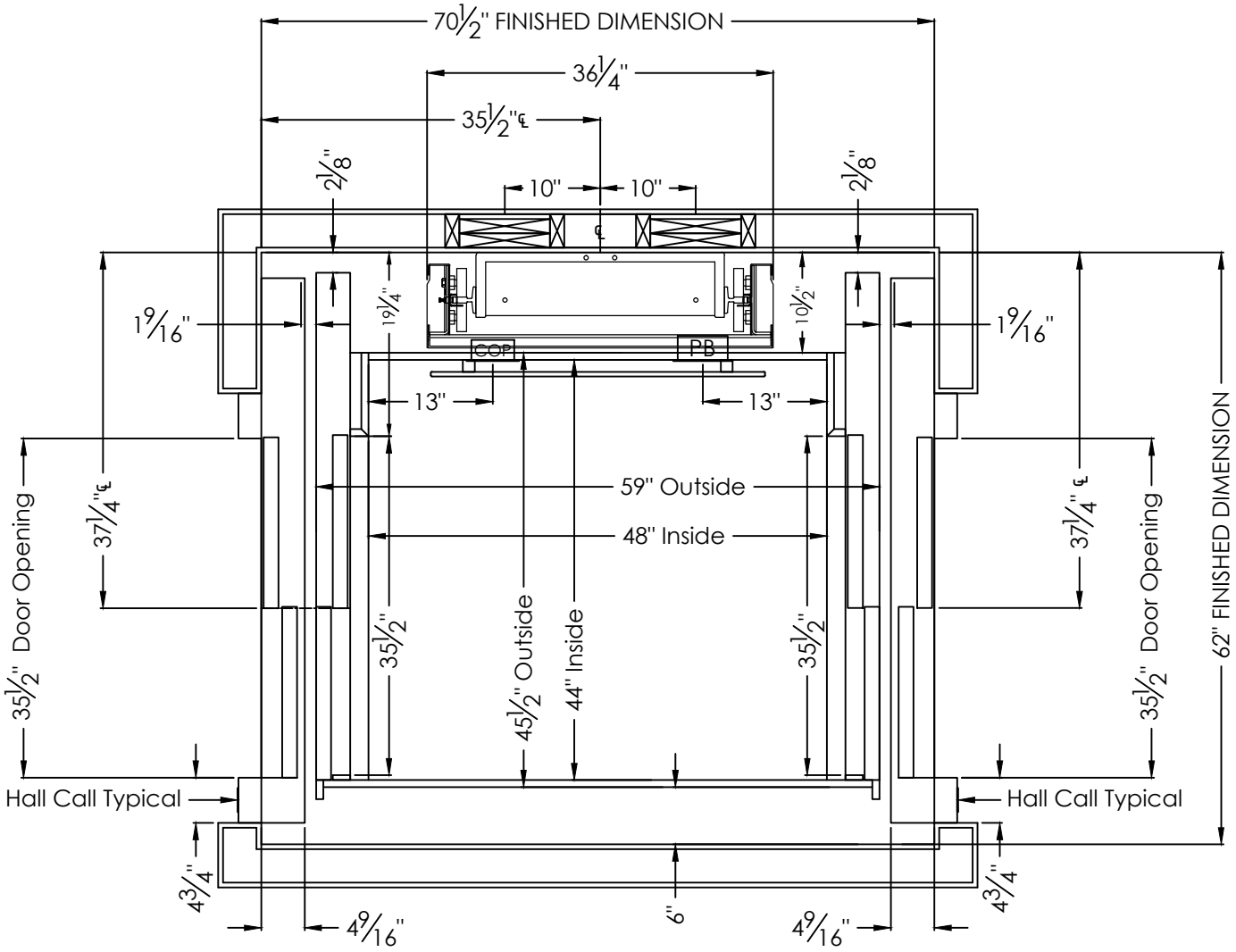

NOTES:
CAR FLOORING AND FINISHINGS MUST NOT EXCEED 25 LBS

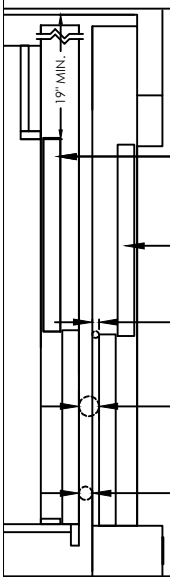

TYPICAL DOOR LOCATION DETAIL

2 SPEED CAR & LANDING DOORS

2 SPEED CAR DOORS

2 SPEED LANDING DOORS

¾" MAXIMUM
(INSIDE FACE OF LANDING DOOR TO SILL)

4" MAXIMUM
THE INSIDE FACE OF LANDING DOOR
TO OUTSIDE OF FAST CAR DOOR MUST REJECT A 4" BALL.

1 ⅛" - 1 ¼" RUN CLR (SILL TO SILL)

SYMMETRY	SYMMETRY ELEVATING SOLUTIONS PH 877-375-1428		
TITLE 44 X 48 OPPOSITE OPENINGS RH LH			SCALE NONE
DRAWN BY	ORIGINAL DATE 04-02-2020	DRAWING NO. RE178	REV 0
JOB INFORMATION THIS DRAWING IS FOR PLANNING PURPOSES ONLY, DO NOT USE FOR CONSTRUCTION			